INSTRUCTION MANUAL
TREE CLIMBERS
DR1
DR4

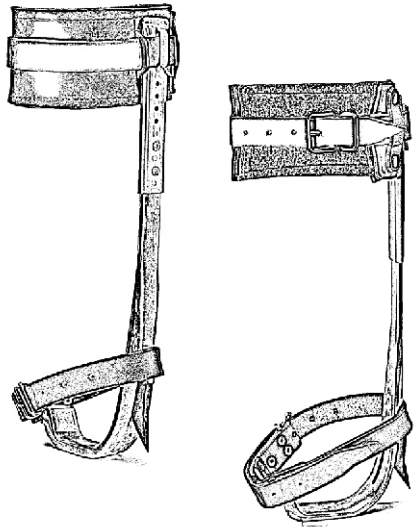

LANEX a. s. - Hlučínská 1 / 96; 747 23 Bolatice
Tel: + 420 553 751 111; Fax:: + 420 553 654 125
E-mail: lanex@lanex.cz, www.lanex.cz

INSTRUCTION MANUAL
TREE CLIMBERS
DR1
DR4

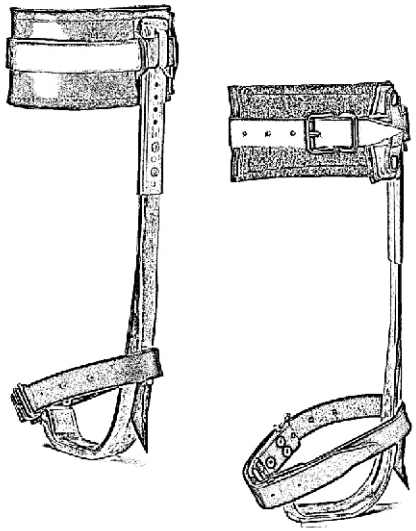

LANEX a. s. - Hlučínská 1 / 96; 747 23 Bolatice
Tel: + 420 553 751 111; Fax:: + 420 553 654 125
E-mail: lanex@lanex.cz, www.lanex.cz

1. Destination
Tree climbers are used to climb the trees performing various works at heights e.g. during gathering fruits or seeds.

2. Construction
Hook of climber is made from steel. Spike is made from spoecial type of termic improve high-carbon steel.

a. Hook with stirrup
b. Spike
c. Upper guard pad
d. Lower guard pade.
e. Fixing bolt of spike

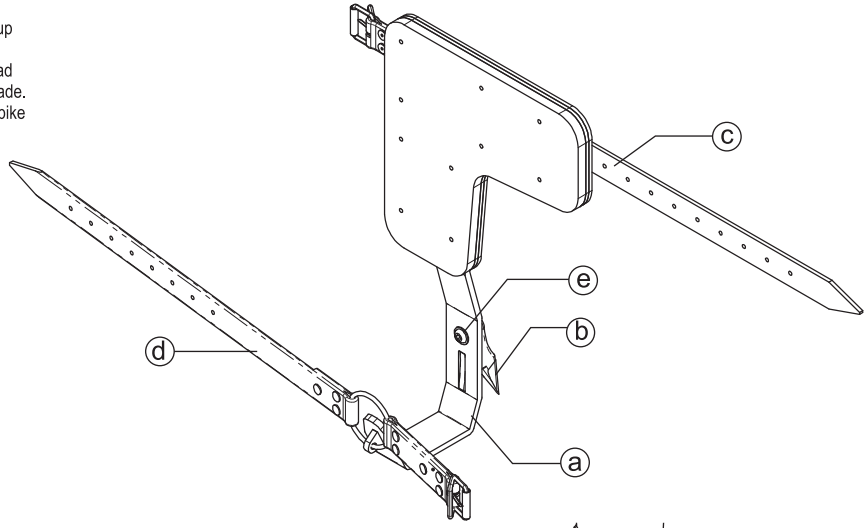

3. Installation
To put on the tree climber place the stirrup under a sole of your boot next to the heel.
The spike should be situated on the inner side of a foot.
Tree climber should be tightly fastened to the leg by two straps,
under the ankle (lower guard pad) and on the calf (upper guard pad).
It is possibility to regulation of height of upper guard pad - for do that
After displacement of guard pad it is necessary to screw both bolts.

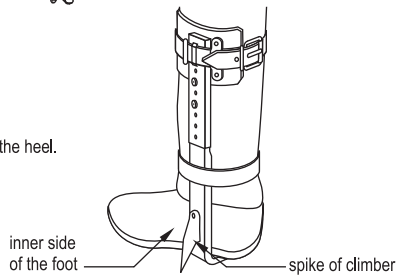

4. Climbing a tree
The tree climbers have to be used with additional protection against falling (full body harness with fall arrester) and slipping down (safety belt with a lanyard wrapped around the tree).
Climbing up or down the trunk with each step we should strongly drive spike into the tree (removing falling bark) and carry body weight by degrees.
The steps shouldn't be longer than 20 - 30 cm.

5. Maintenance and storage
After work the tree climbers should be cleaned from a mud and resin. After cleaning control the climbers condition.
If the straps are wet they should be dried in room temperature. Don't allow to crack the straps.
It is necessary to check sharpness of spike of climber. It is necessary to replace blunt spike to new one which is prepared by producer of the climbers. Spike of climber can be repalaced by unscrewing a fixing bolt (f).

6. Safety conditions
A. Climbers have to be used by person trained in working on height.
B. Before each using we should pay special attention to the condition of the tree climbers and straps.
C. Used up or damaged straps should be changed with new straps supplied by tree climbers manufacturer.
D. It is not allowed to sharpen blunt spike.
E. It is recommended to limit climbing on the hard trees like beech, oak, hornbeam because of premature blunting of the spike.
F. It is recommended to make annual detailed visual inspection of used tree climbers. The tree climbers must be out of service if any cracks or deformations appeared.
G. The tree climbers should be stored away from damp and caustic exhalatio

1. Destination
Tree climbers are used to climb the trees performing various works at heights e.g. during gathering fruits or seeds.

2. Construction
Hook of climber is made from steel. Spike is made from spoecial type of termic improve high-carbon steel.

a. Hook with stirrup
b. Spike
c. Upper guard pad
d. Lower guard pade.
e. Fixing bolt of spike

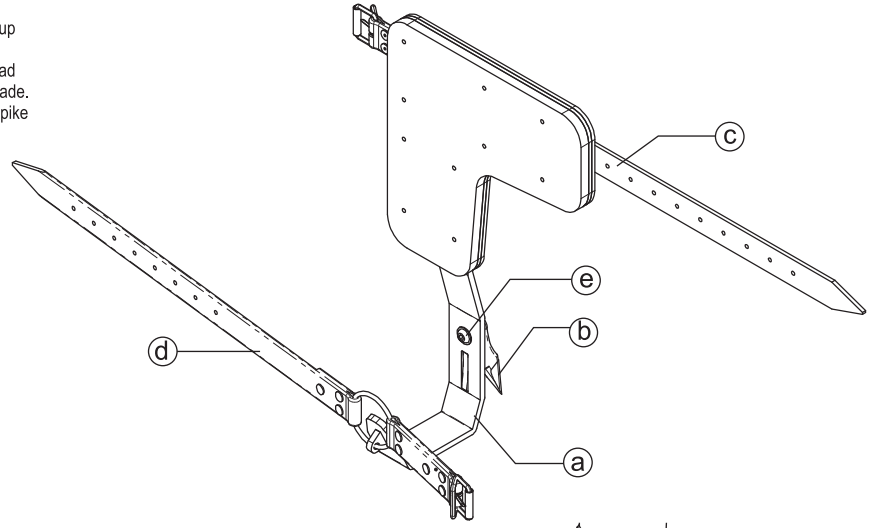

3. Installation
To put on the tree climber place the stirrup under a sole of your boot next to the heel.
The spike should be situated on the inner side of a foot.
Tree climber should be tightly fastened to the leg by two straps,
under the ankle (lower guard pad) and on the calf (upper guard pad).
It is possibility to regulation of height of upper guard pad - for do that
After displacement of guard pad it is necessary to screw both bolts.

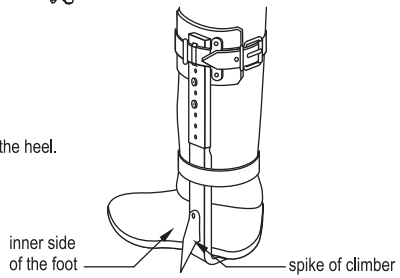

4. Climbing a tree
The tree climbers have to be used with additional protection against falling (full body harness with fall arrester) and slipping down (safety belt with a lanyard wrapped around the tree).
Climbing up or down the trunk with each step we should strongly drive spike into the tree (removing falling bark) and carry body weight by degrees.
The steps shouldn't be longer than 20 - 30 cm.

5. Maintenance and storage
After work the tree climbers should be cleaned from a mud and resin. After cleaning control the climbers condition.
If the straps are wet they should be dried in room temperature. Don't allow to crack the straps.
It is necessary to check sharpness of spike of climber. It is necessary to replace blunt spike to new one which is prepared by producer of the climbers. Spike of climber can be repalaced by unscrewing a fixing bolt (f).

6. Safety conditions
A. Climbers have to be used by person trained in working on height.
B. Before each using we should pay special attention to the condition of the tree climbers and straps.
C. Used up or damaged straps should be changed with new straps supplied by tree climbers manufacturer.
D. It is not allowed to sharpen blunt spike.
E. It is recommended to limit climbing on the hard trees like beech, oak, hornbeam because of premature blunting of the spike.
F. It is recommended to make annual detailed visual inspection of used tree climbers. The tree climbers must be out of service if any cracks or deformations appeared.
G. The tree climbers should be stored away from damp and caustic exhalatio