XPTU400. XPTU401
Rope Pulleys

USER MANUAL

Revision: 1/25.03.2013 ENG

LANEX a. s. - Hlučínská 1 / 96; 747 23 Bolatice; Tel: + 420 553 751 111;
Fax: + 420 553 654 125, E-mail: lanex@lanex.cz, www.lanex.cz

1. Definitions

WLL – Working Load Limit
MBS – Minimum Breaking Strength
DF – Design Factor

2. Basic parameters of the device

Table 1.

PARAMETER	XPTU400	XPTU401
		
Possibility to use with steel rope	none	none
Max rope diameter	< ø 18	< ø 18
Weight	1,38 kg	1,38 kg
Conforms to	EN 12278:2007	EN 12278:2007
Conforms to	EN795:2012 Class B	EN795:2012 Class B
Conforms to	Machine Directive 2006/42/EC	Machine Directive 2006/42/EC
WLL (Working Load Limit)	20 kN (10 kN + 10 kN)	20 kN (10 kN + 10 kN)
MBS (Minimum Breaking Strength)	100 kN	100 kN
DF (Design Factor)	1:5	1:5
Body mass of a person being lifted	< 140 kg	< 140 kg

3. Main application of the device

- The device can be used mainly while working at heights, performing arborist tasks and during lifting and lowering loads.
- The device was designed for lowering and lifting loads, as well as it can be used as an element of personal protective equipment against falling from height, serving as an anchoring point that conforms to the EN 795 Class B standard and European Union Directive 89/686/EWG.
- The device conforms to all standards enumerated in the table above. It is obligatory not to exceed maximum loads as recommended by the manufacturer and contact the manufacturer or distributor in case of any questions.
- The product is designed to be used in normal weather conditions (-40˚C - +50˚C). Working in humid environments or when experiencing icing may decrease both strength and load capacity of the device. One should contact the manufacturer or distributor prior to start working in aggressive environment of any type.
- One should avoid exposing the device to caustic substances and chemical reagents.
- The device is designed to enable for additional motion stabilization by using the hollow axle. The stabilization task should be done by means of rope of ø19 mm diameter.

4. Types of device

The device is available in two design versions (Picture 1-2). The XPTU400 device is equipped with fast-snapping twist lock, whereas the XPTU401 uses swivel blocking bolt. The two models differ in strength value (Table 1).
Different locking mechanism allows for appropriate selection of pulley type to the kind of task being performed.

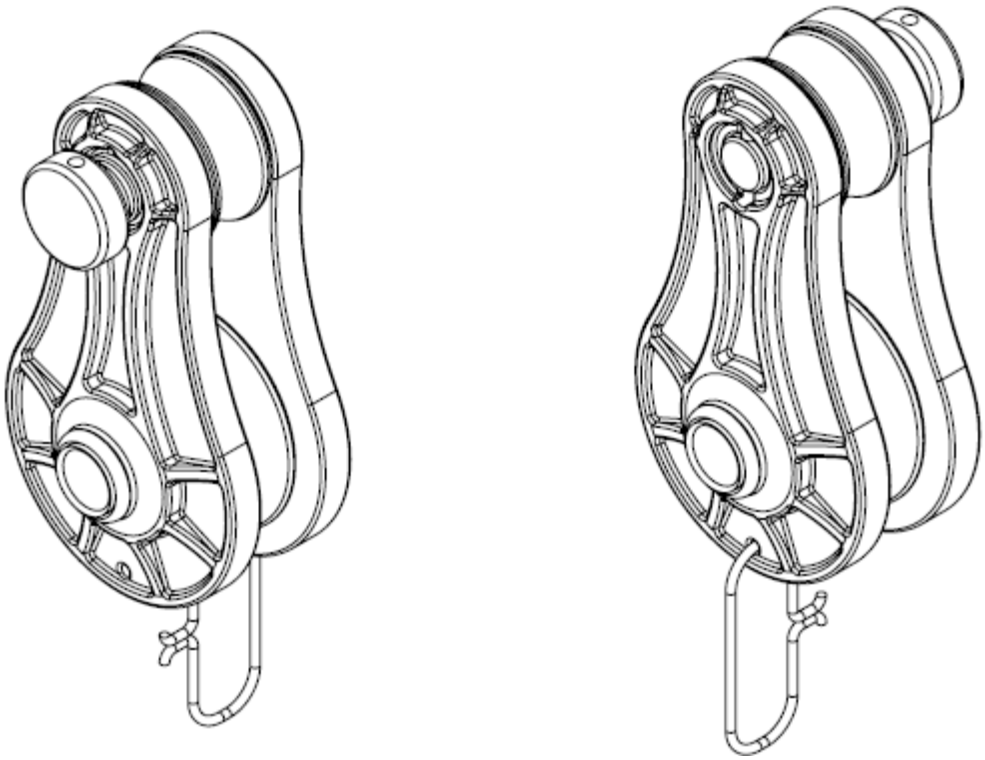

Picture 1. XPTU400 Rope Pulley

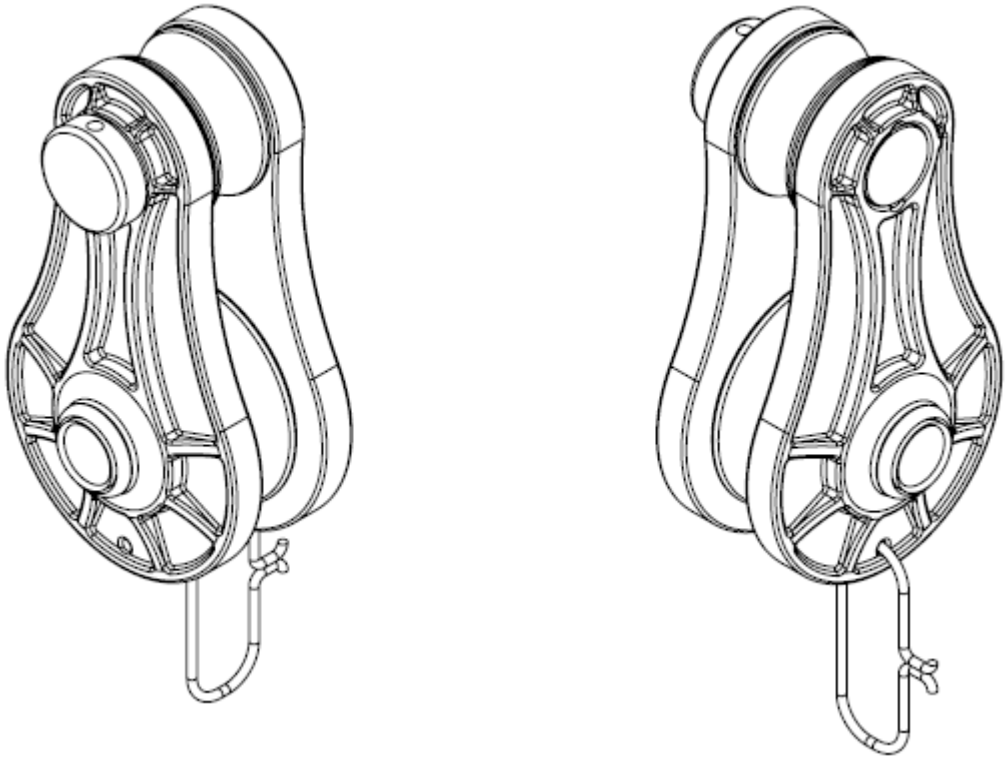

Picture 2. XPTU401 Rope Pulley

5. Dimensions

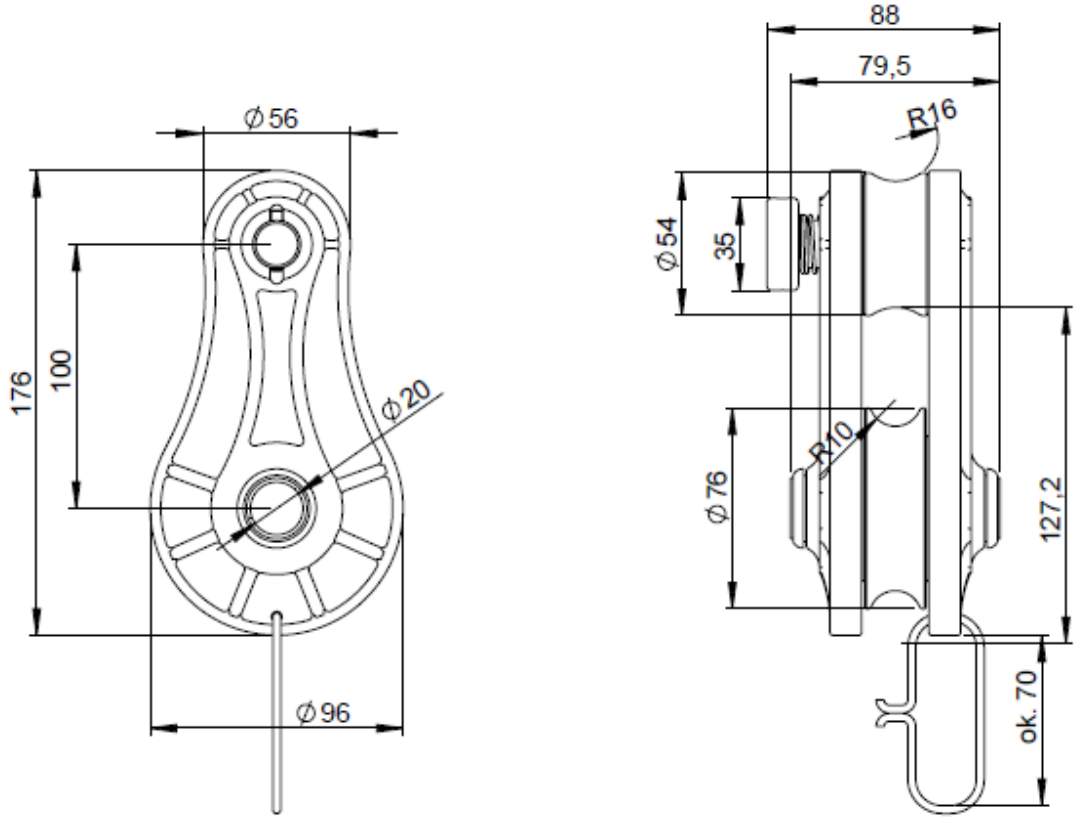

Picture 3. XPTU400 Rope Pulley dimensions

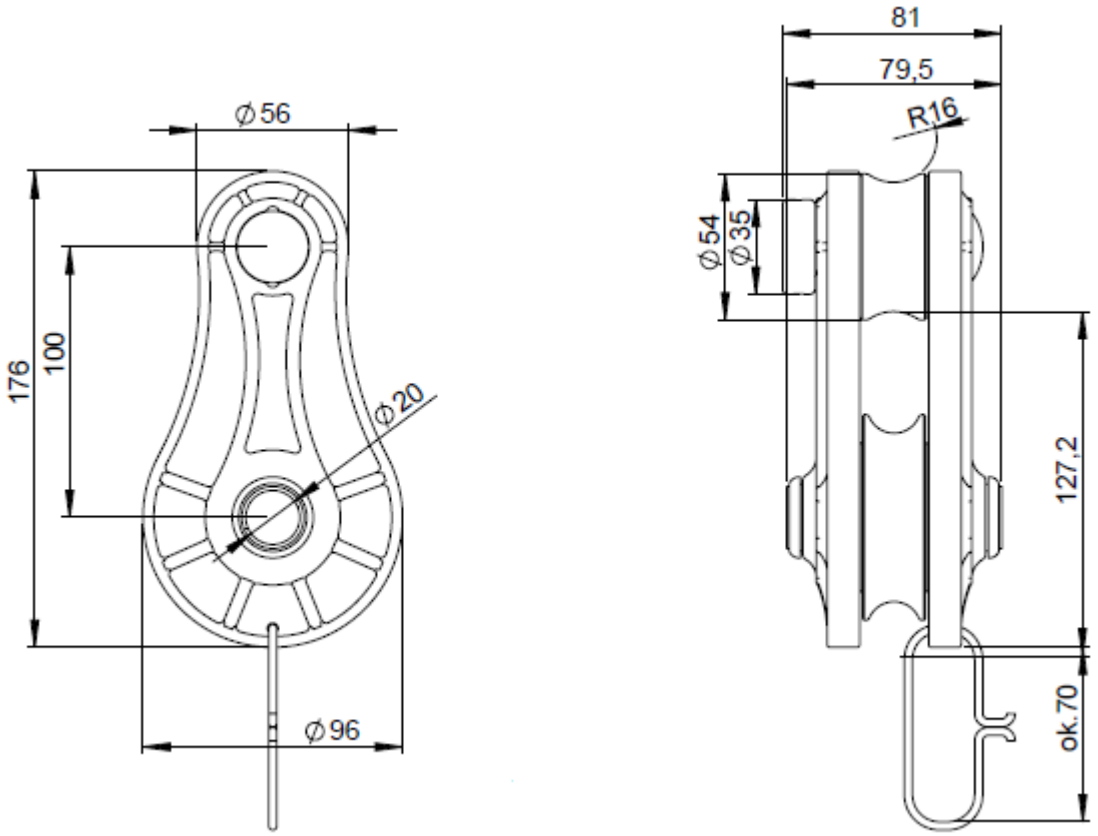

Picture 4. XPTU401 Rope Pulley dimensions

6. Construction of the device

The rope pulleys are made of two rollers of different diameter, separated from each other by 100 mm. They are placed in between two forged aluminium plates equipped with additional strengthening ribs increasing their tear resistance. The bigger roller is nested on the hollow axle with the special needle bearing of increased strength, which enables for smooth roller movement even under load equal to maximum admissible value (WLL) or higher.
After being unlocked by means of twist lock placed in smaller roller axle, one side plate of the rope pulley, can be tilted in order to enable for easy installation of working rope on the main pulley.
All the device elements, apart from aluminium body and rollers, are made of stainless steel that guarantees high durability and anti-corrosion characteristics even under heavy work load conditions and accidental minor hits and abrasions suffered by the device.
The use of aluminium alloys for all the most important device components enabled for significant decrement of device weight.
The rope pulleys are available in different colours that were chosen in order to increase their visibility, especially while working in dark areas of dense forest coverage.
The smaller roller of the pulley is not revolving but does posses certain movement possibility, thus the work plan has to be prepared in such a way that it would not be used to carry any torque loads (picture 6). Only the bigger roller is to be used for lowering loads, as it is the only element with special bearing capabilities. The smaller roller can be used as an attachment point for a single person body harness by means of attachment lanyard when the device is being used as the anchoring point.

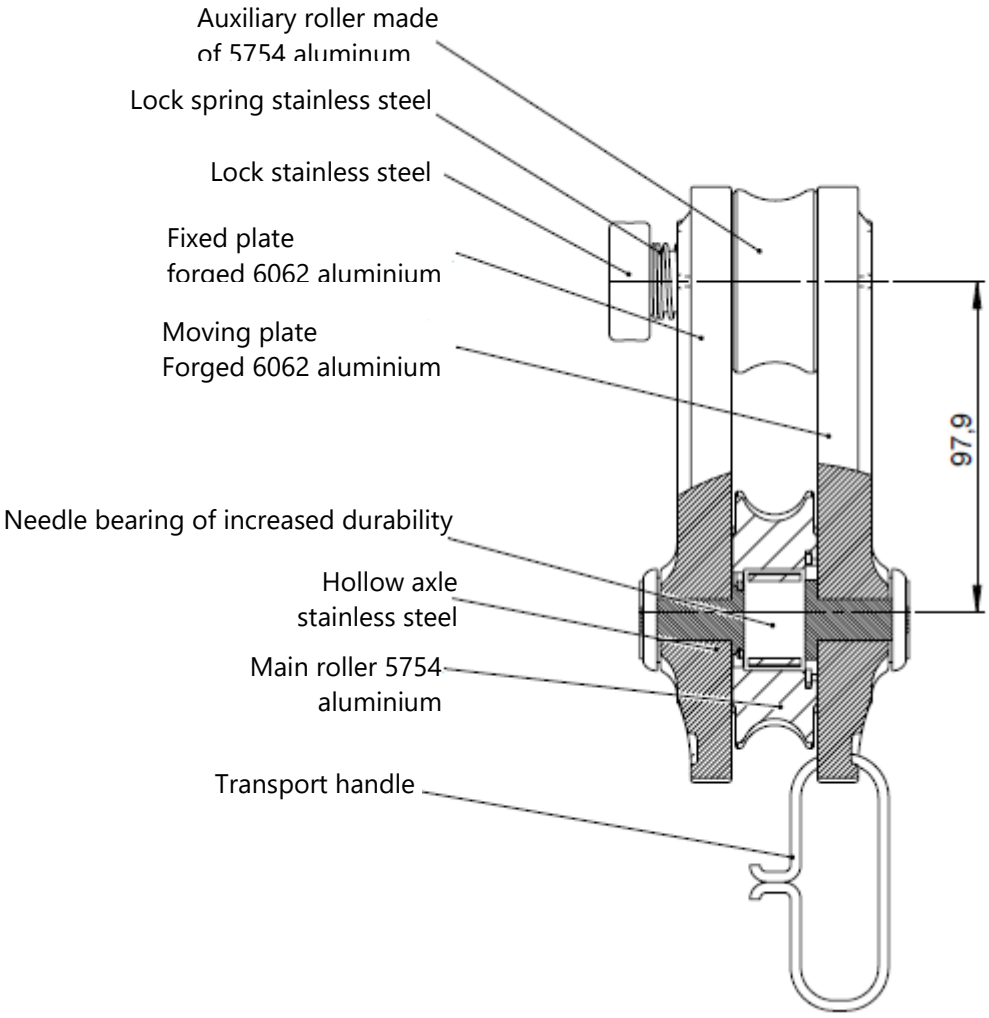

Picture 5. Design of the pulleys.

Picture 6 illustrates the possible directions of rope movement via the device.

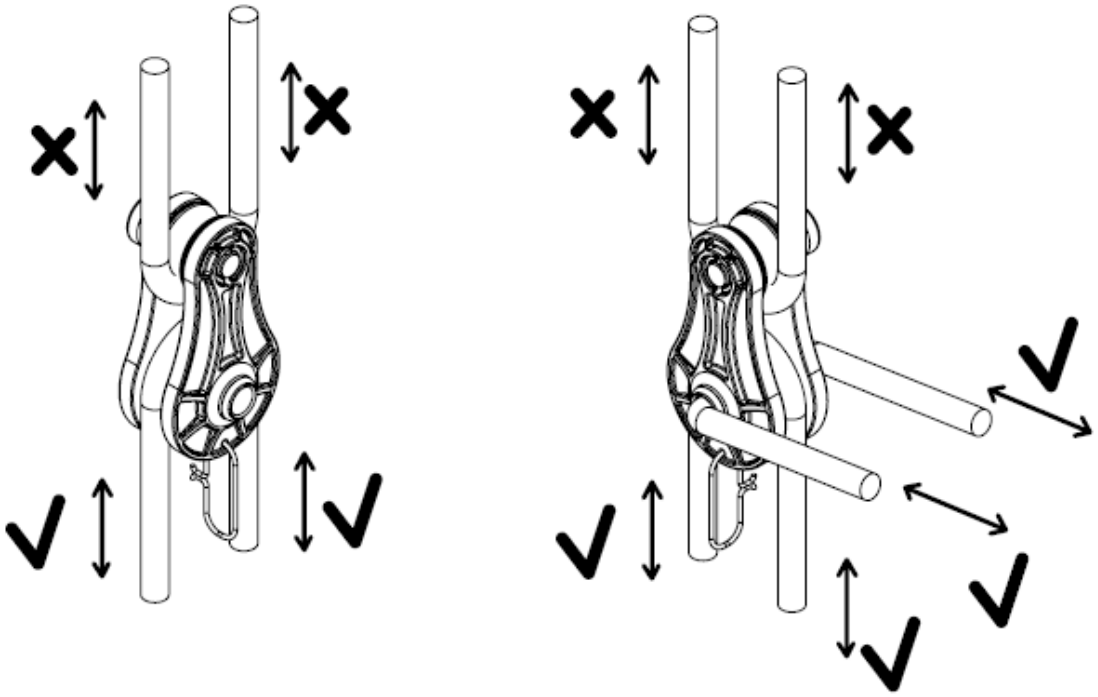

Picture 6. Example of allowed directions of rope movement through the pulley.

Picture 6 illustrates the possible directions of rope movement via the device.

7. Marking of the device

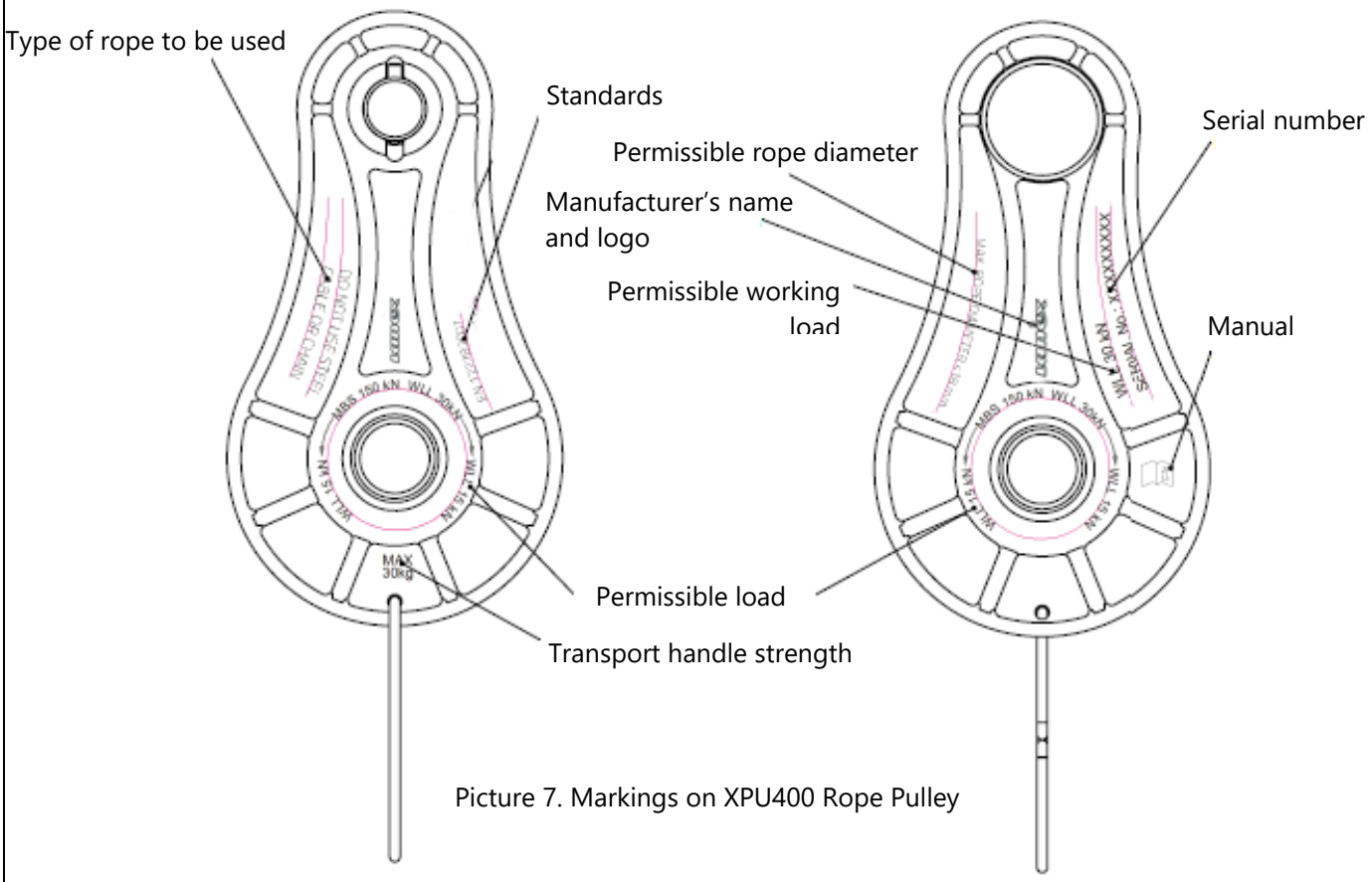

Picture 7. Markings on XPU400 Rope Pulley

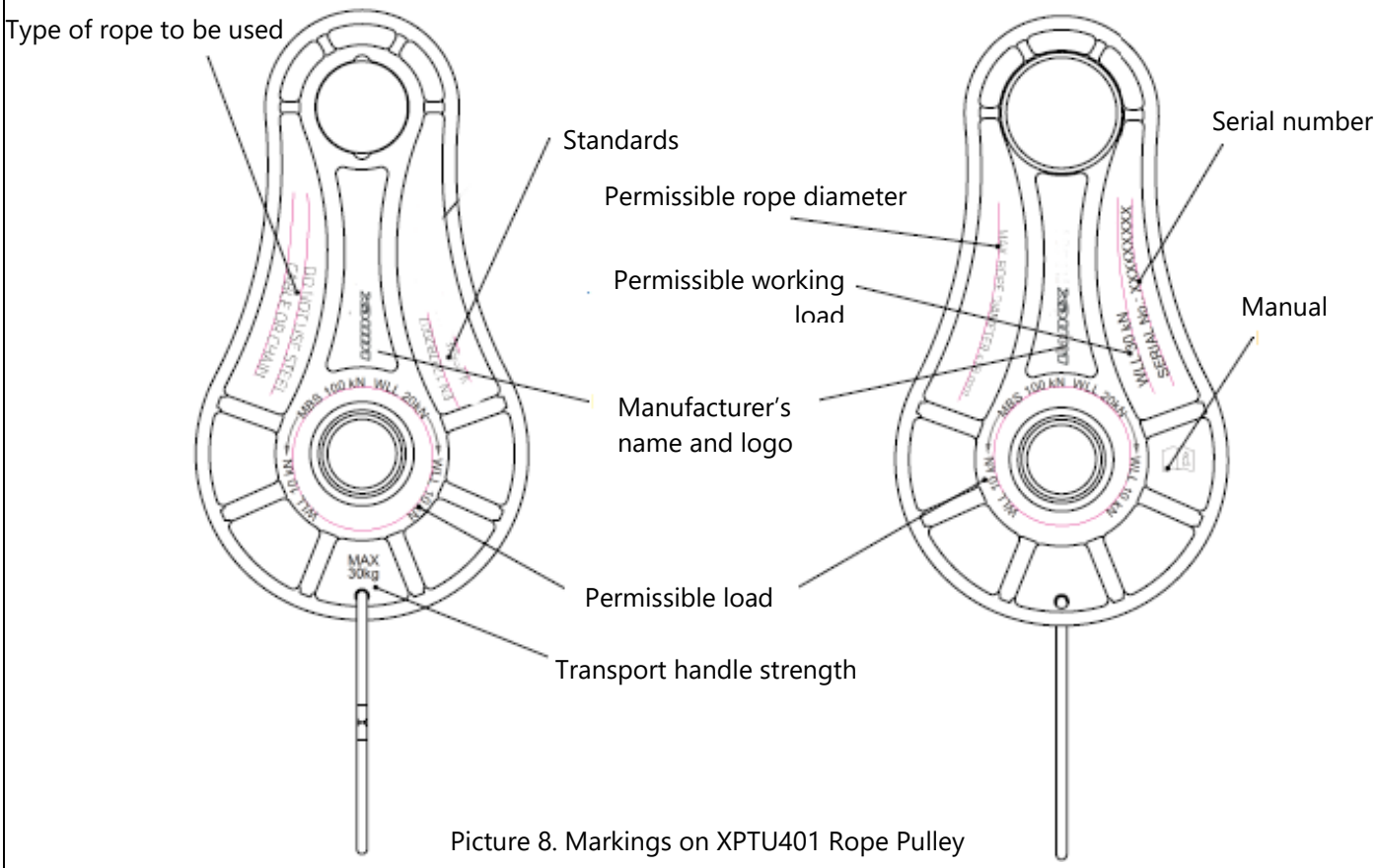

Picture 8. Markings on XPTU401 Rope Pulley

8. Admissible Load

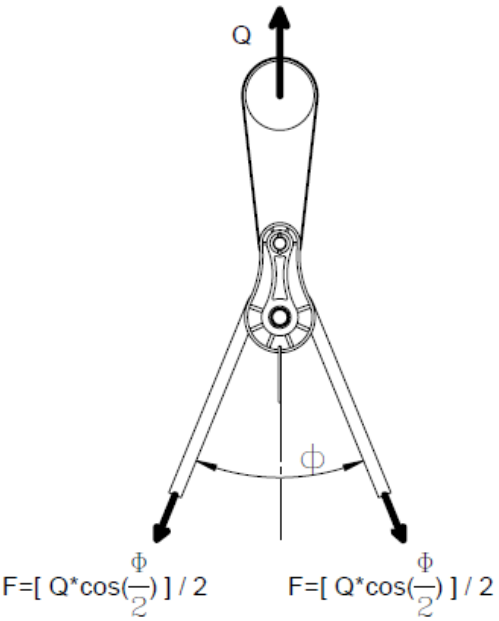

Table 2. Sample force values as a function of rope angle

#	For XPXPTU400 Q = WLL = 30kN		For XPTU401 Q = WLL = 20kN	
	Force F [kN]	Angle between rope segments	Force F [kN]	Angle between rope segments
1.	15	0 ˚	10	0 ˚
2.	14.5	30 ˚	9.7	30 ˚
3.	13.8	45 ˚	9.2	45 ˚
4.	13	60 ˚	8.7	60 ˚
5.	10.6	90 ˚	7	90 ˚
6.	7.5	120 ˚	5	120 ˚
7.	5.75	135 ˚	3.82	135 ˚
8.	2.6	160 ˚	1.74	160 ˚
9.	0	180 ˚	0	180 ˚

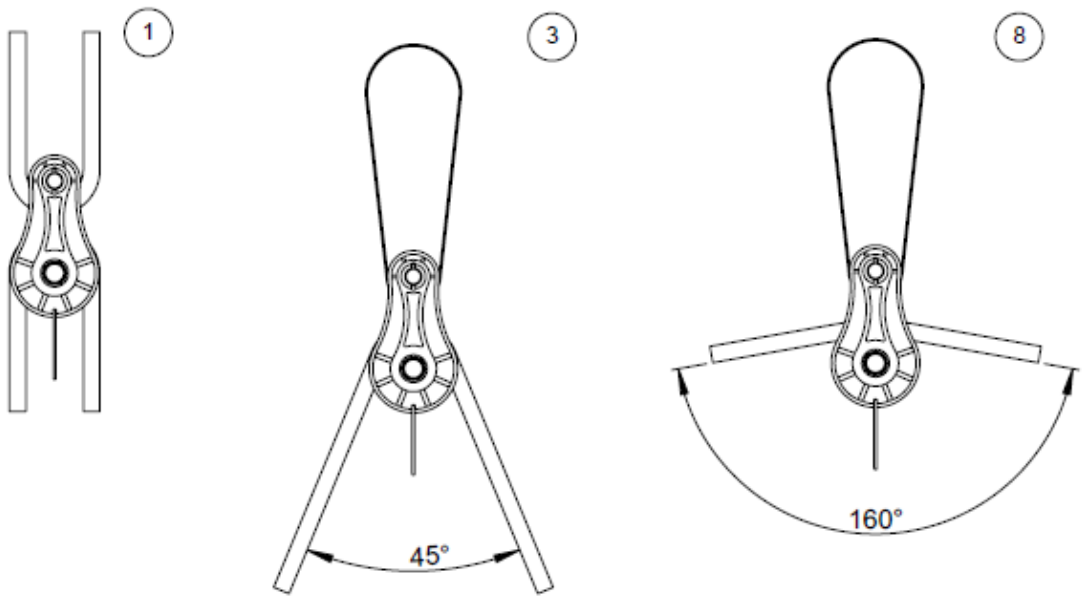

Picture 9. Example of force distribution on the pulley with maximum working load, as a function of angle between rope segments.

9. Opening the Pulley

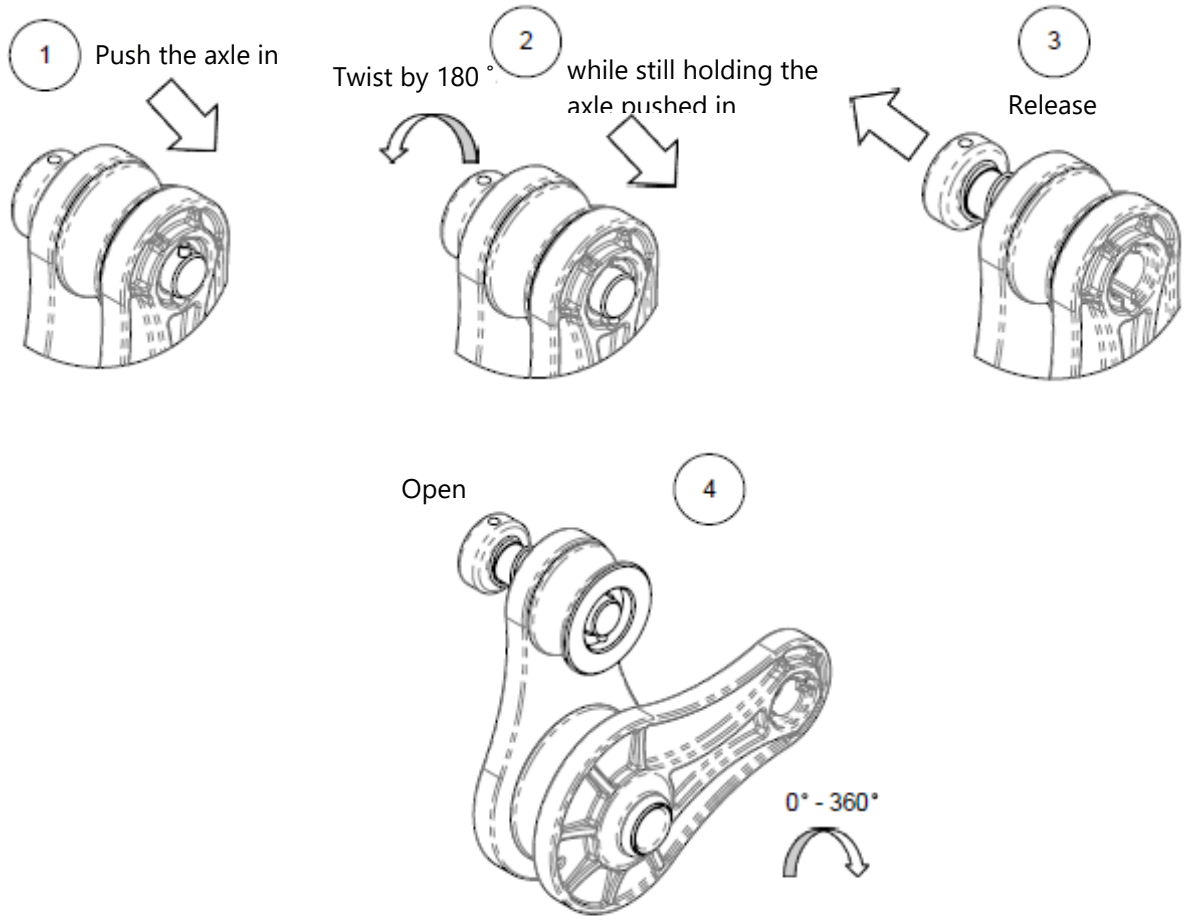

Picture 10. Actions sequence to open the XPXPTU400 Pulley.

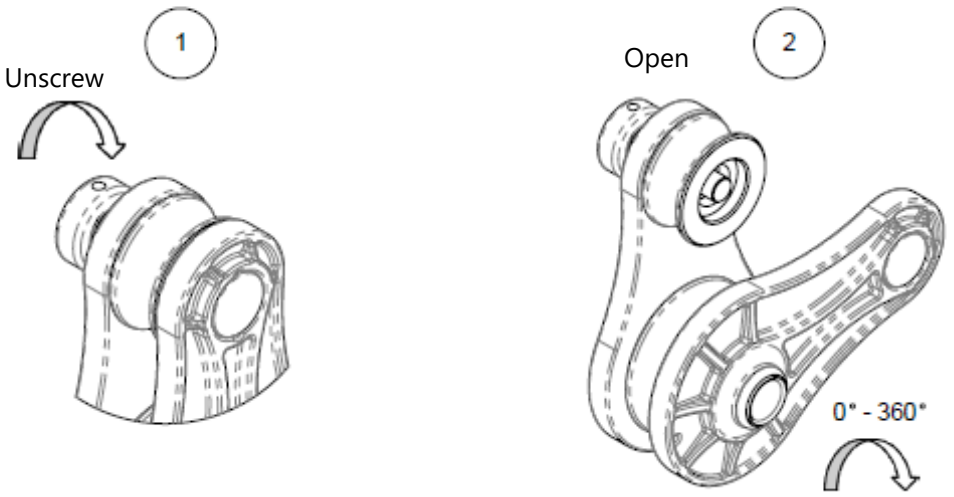

Picture 11. Actions sequence to open the XPTU401 Pulley.

10. Closing the Pulley

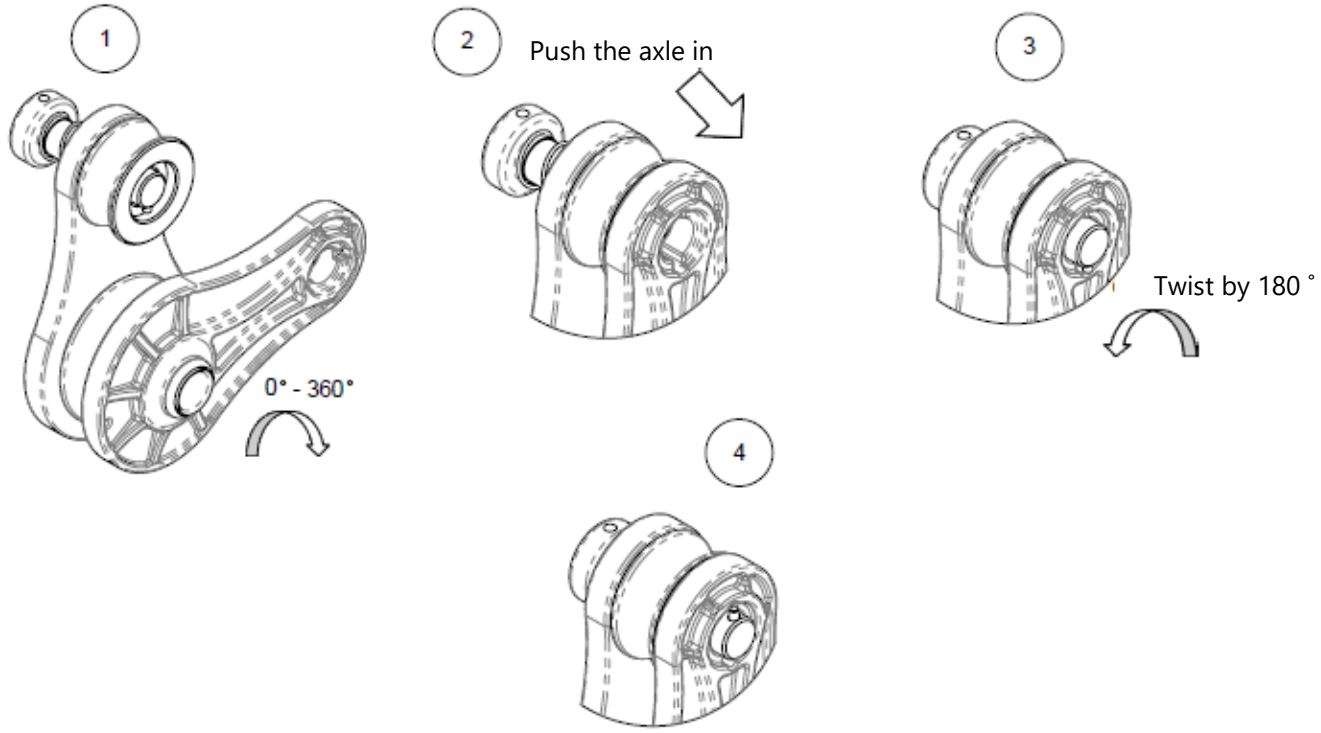

Twist until the bolt settles into the groove and release.

Picture 12. Actions sequence to close the XPXPTU400 Pulley.

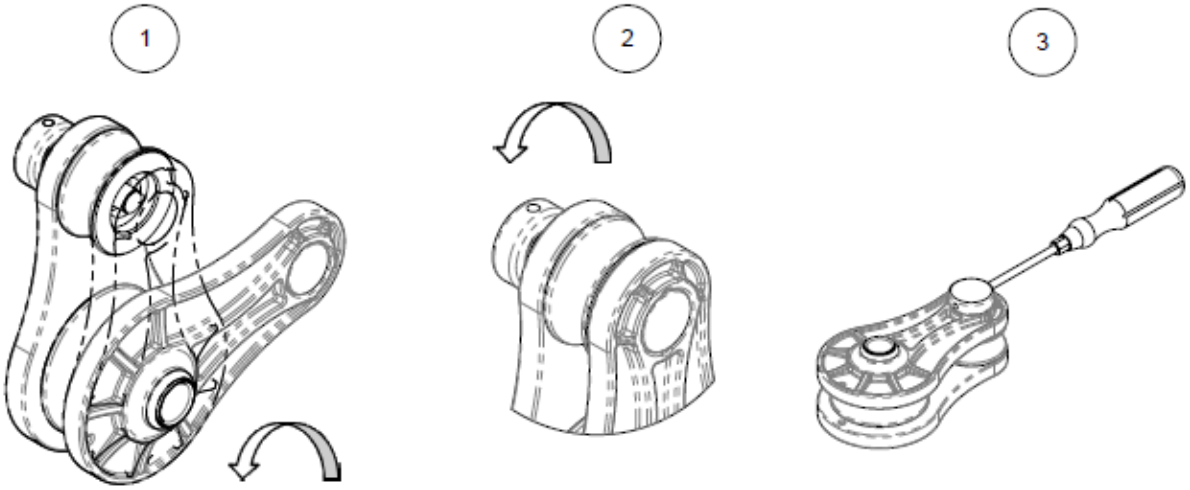

Position vertically

Turn the axle

Screw to secure

Picture 13. Actions sequence to close the XPTU401 Pulley.

11. Lifting loads with auxiliary rope

Before starting works make sure to fence off the area in order to limit access and protect possible passers-by.
In case of limited work area for loads lowering, the pulleys may be used not only to transport objects vertically, but also tilted and displaced (Picture 14) by means of additional pulling rope that is threaded through the main axle of the pulley. Such an approach guarantees safe lowering of loads, avoiding any possible collisions with other vertical elements used as anchoring points for the upper loop of the whole assembly.

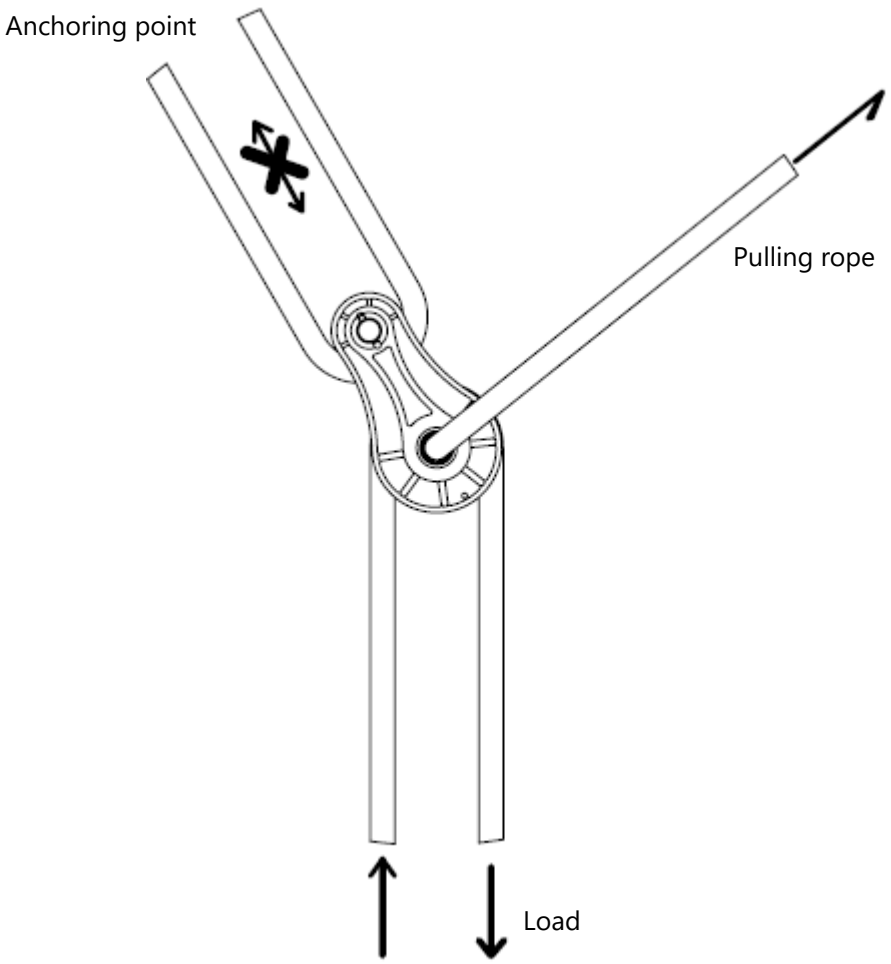

Picture 14. An example of load transporting assembly.

12. Transporting the rope pulley

The device can be transported in many different fashions. It is equipped with a handle that make it easy to hang it to a carabineer and thus attaching it to a body harness that an employee wears.

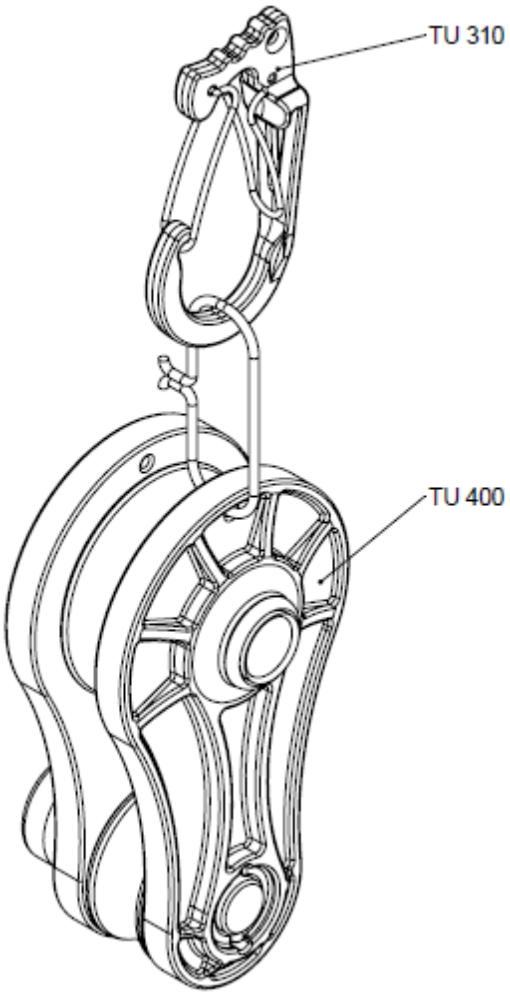

Picture 15. Sample way of transporting the rope pulley.

13. Installation of the rope pulley onto a tree

The following pictures show subsequent phases of installing the pulley onto a tree trunk.

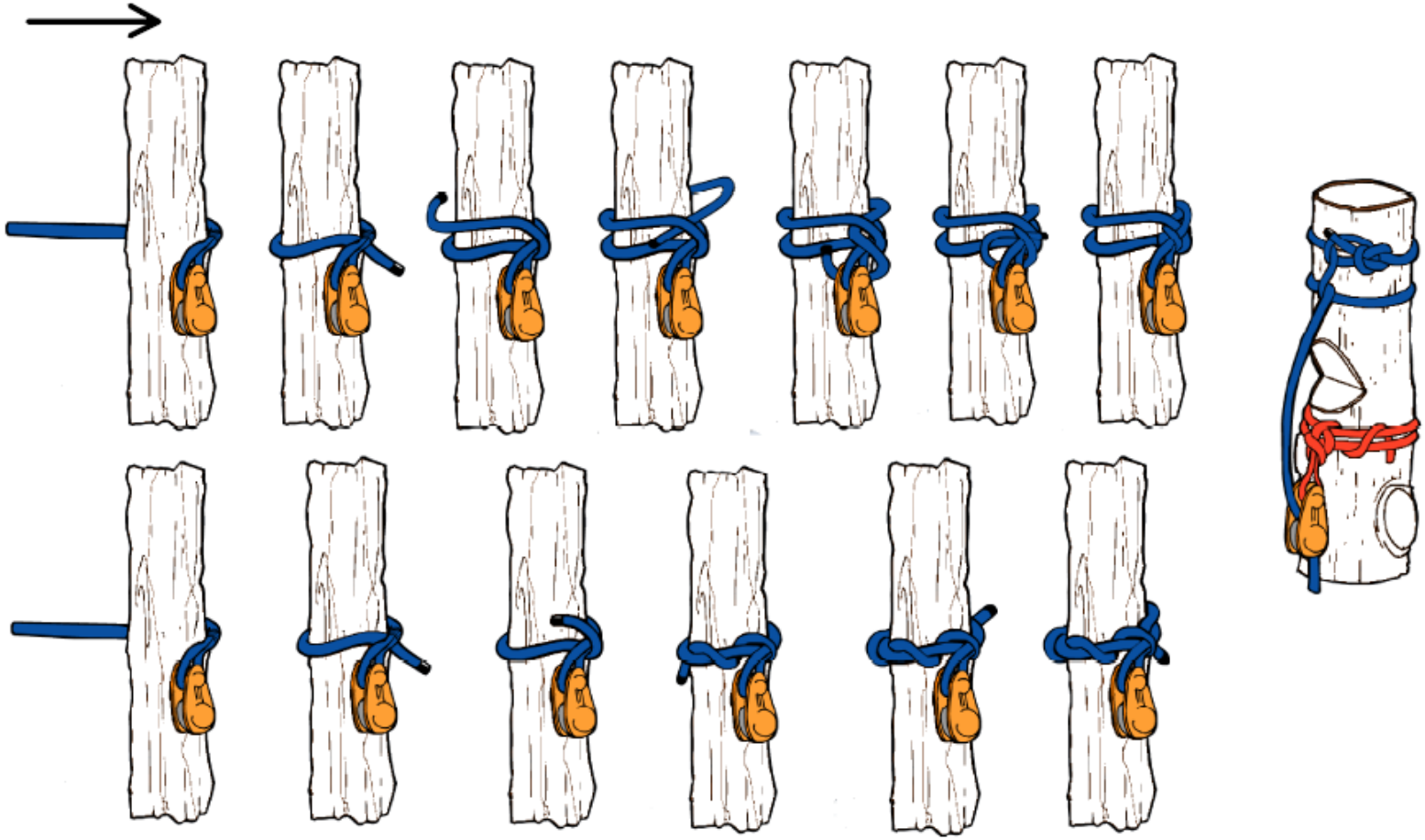

Picture 16. A sample way to install the pulley onto a tree trunk.

14. Sample application of the device

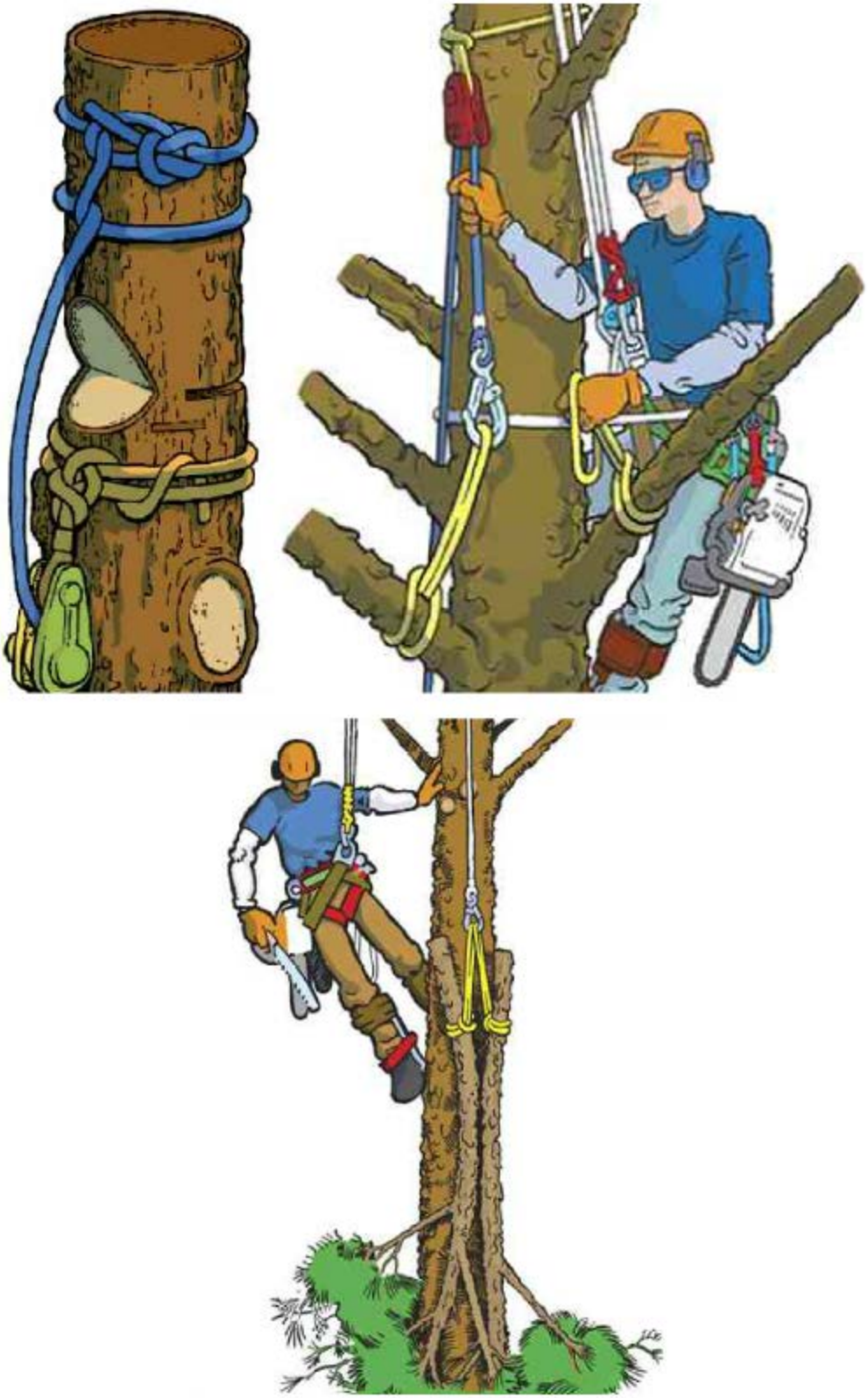

14. Sample application of the device

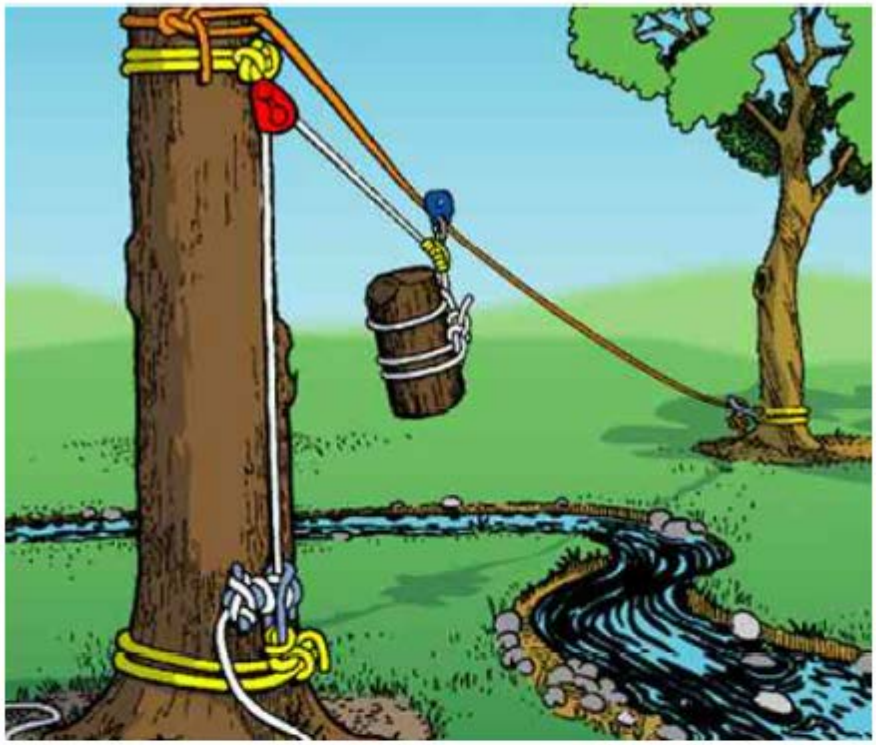

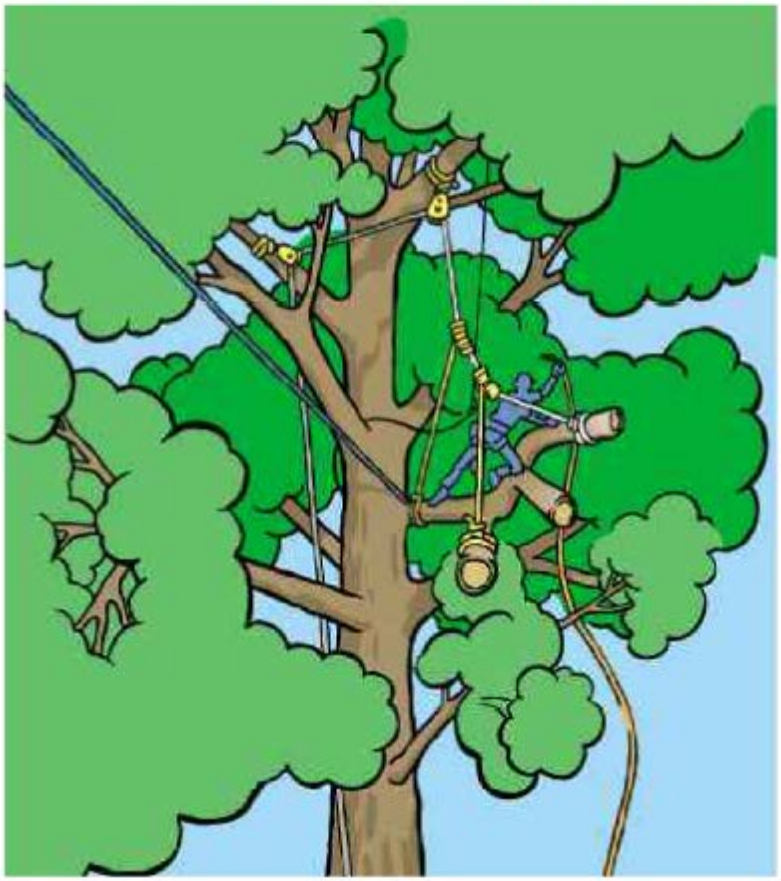

MAIN RULES FOR USING THE PERSONAL PROTECTIVE EQUIPMENT AGAINST FALLING FROM HEIGHTS

- The personal protective equipment against falling from heights may be used only by people who underwent appropriate training.
- The personal protective equipment cannot be used by persons whose health condition may influence the safety of both everyday's operation and possible rescue activities.
- The rescue plan has to be prepared and ready to implement in case the emergency situation occurs.
- It is strictly forbidden to modify the equipment in any aspect without prior, written consent of the manufacturer.
- Any repairs of the equipment may be performed uniquely by the manufacturer of the devices or a third party authorised to do so by the manufacturer.
- The personal protective equipment cannot be used outside of the scope it is designed to.
- The personal protective equipment is considered ***individual*** and can be used by a single person only.
- Before use one is obliged to check if all the elements of the equipment that composes the fall protection system are working together flawlessly. All the connections and fittings are to be checked periodically in order to eliminate the risk of accidental loosening or disconnecting.
- In case the operation of any given element of the fall protection set is disturbed by other element(s)'s operation, it is strictly forbidden to use the set.
- Every time before using the personal protective equipment it is required to thoroughly check its condition in order to identify and eliminate any malfunctions.
- While performing the check one has to verify all the elements of the equipment, paying special attention to any possible damages, excessive wear, corrosion, abrasions, cuts and malfunctioning. Special care needs to be taken while examination of the following elements:
  - buckles, adjustment elements, anchoring (connecting) points, webbing, seams and loops, in case of body harnesses and positioning belts;
  - connecting loops, webbing, seams, casing and connecting elements, in case of energy absorbers;
  - lanyard, loops, thimbles, connectors and adjustment elements, in case of lanyards and fibre-made guides;
  - lanyard, wires, clamps, loops, thimbles, connectors and adjustment elements, in case of lanyards and steel guides;
  - lanyard or webbing, proper operation of winding and blocking mechanism, casing, energy absorber and connectors in case of retractable fall arrestors;
  - device body, proper sliding movement along the guide and correct operation of blocking mechanism, rollers, screws and bolts, connectors and safety energy absorber, in case of rope grabs;
  - load carrying body, rivets, main clamp, proper operation of blocking mechanism, in case of connectors (snap hooks);
- At least once a year, after each 12 months of using the personal protective equipment it has to be withdrawn from use in order to perform thorough periodical check-up. The examination can be executed by a person responsible for periodical inspections of the personal protective equipment in a company who received appropriate training. The periodical inspections can be also performed by the manufacturer of the equipment or other company or entity authorised by the manufacturer. All the components of the equipment are to be precisely checked and special attention must be paid to any signs of possible damages, excessive wear, corrosion, abrasions, cuts and malfunctioning (see preceding point).
- In case of complicated and complex design of the equipment, such as in case of retractable fall arresters, the periodical inspections can be done only by the manufacturer or other company or entity authorised by the manufacturer. After the check is completed the date of the following examination will be defined.
- Regular equipment inspections are basic requirement for maintaining proper condition of the equipment and user safety that depends on proper and accurate operation and reliability of the equipment.
- Readability of all the markings on the protective equipment is to be verified during the periodical check-up (device parameters).
- All the information concerning the safety devices (name, serial number, data of purchase and first use, user's name, repairs and periodic inspections related information, as well as withdrawal from operation) have to be included in the equipment identity card issued with a device. The company using the equipment is held responsible for the consistency and completeness of the date in the equipment identity card. It is being filled in by a person responsible for personal protective equipment in the company. Any personal protective equipment without issued and complete equipment identity card cannot be used.
- Should the equipment be sold outside of its country of origin, the supplier is obliged to issue user's manual with information related to maintenance, periodic inspections and repairs in an official language of the country the equipment is to be used.

MAIN RULES FOR USING THE PERSONAL PROTECTIVE EQUIPMENT AGAINST FALLING FROM HEIGHTS

- The personal protective equipment has to be withdrawn from use immediately if any doubts concerning its condition or proper operation arise. The equipment may be used again only after performing thorough examination of the devices by the manufacturer followed by the written permission to use it again.
- The personal protective equipment has to be withdrawn from use and disposed (permanently destroyed) if it was used during fall arrest incident.
- The safety body harness is the one and only device allowed to be used as an interface (securing the user) between user's body and personal fall protection equipment.
- The fall from height protection equipment can be attached to connecting points (loops, clamps) of the body harness designated with a capital letter "A". The "A/2" marking of "half A letter" marking signifies the necessity to join together two anchoring point of the same designation. Connecting of the protective system to a single anchoring point (loop, or lamp), designated as "A/2", or "half A letter" is forbidden. See the pictures below:

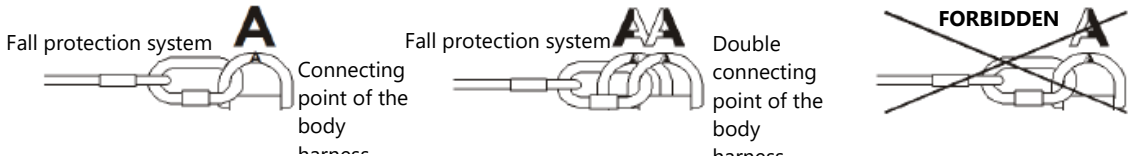

- The construction of anchoring points (devices) for the protection systems against fall from height has to be solid and stable and it needs to be positioned in a way that limits the possibility of fall and minimises the free fall distance. The anchoring point should be situated above user's work place. Shape and construction of the anchoring point must ensure reliable connection of the fall protection equipment and must prevent its accidental disconnection. The minimum value of static strength of the anchoring point for the personal protective equipment against fall from heights equals to 15 kN. The use of certified and appropriately designated anchoring points conforming to PN-EN 795 standard is highly recommended.
- One is obliged to check the free space situated below the work place where the personal fall protection equipment is being used, in order to avoid the risk o hitting other objects or platforms situated below while fall arresting. The required value of free space should be verified against data in user manual of the protection system that is going to be used.
- While using the equipment one has to pay special attention to any dangerous phenomena that may influence operation of the system and user's safety; in particular:
  - Existence of loop and friction of ropes against sharp edges; - pendulum falls; - electric current conduction;
  - Damages of any types, such as cuts, wear, corrosion; - exposure to extreme temperatures;
  - Negative influence of climate agents; - exposure to chemical agents;
- The personal protective equipment has to be transported in packages securing it from any damages or getting wet, for example in bags made of impregnated fabrics, in steel or plastic casings or cases.
- The personal protective equipment is to be cleaned and disinfected in a way that prevents the materials it is made of (raw material) from getting damaged. The textile materials (ropes, webbing) are to be cleaned with agents dedicated to delicate fabrics. They can be either hand washed, or using washing machines. They require thorough rinsing. Elements made of plastics are to be cleaned with water only. Pieces of equipments that get wet during work need to be dried in natural conditions – away from any heat sources. Metal components and parts (springs, hinges, clamps, etc.) should be greased from time to time in order to enhance their functioning.
- The personal protective equipment should be stored loosely packed, in a properly vented and dry place, protected against direct sunlight, UV radiation, dust, other sharp objects, extreme temperatures and caustic substances.

EQUIPMENT IDENTITYCARD		
Name of device	Ref. No.	Date of manufacture
Serial Number	User's Name	

TECHNICAL INSPECTIONS				
Date of inspection	Reasons for performing inspection or repair	Recorded damages, completed repairs, other remarks	Date of next inspection	Signature of responsible person

LANEX a. s. - Hlučínská 1 / 96; 747 23 Bolatice; Tel: + 420 553 751 111;
Fax: + 420 553 654 125, E-mail: lanex@lanex.cz, www.lanex.cz